SITE CLASSIFICATION REPORT

CERTIFICATE 2614481

CLIENT	WA COUNTRY BUILDERS
JOB ADDRESS	**LOT 61 SHEARING RISE WUNDOWIE**
CLIENT JOB NO.	310219
OWNER	BOURKE
STRUCTERRE JOB NO.	S1141728
DATE OF ASSESSMENT	29/8/24

SITE RECORD



SITE CLASSIFICATION	**S**	*(in accordance with AS2870)*
FOOTING DETAIL	**CM3**	
SAND PAD	**Minimum 600mm above cut base**	
BUSHFIRE PRONE AREA	**Yes**	*(see NOTE 2.)*
CORROSION CLASSIFICATION	**R1**	*(Durability Class in accordance with AS3700)*
WIND CLASSIFICATION	**N3**	*(in accordance with AS4055)*
-TERRAIN CATEGORY	2	
-TOPOGRAPHIC	T2	
-SHIELDING	No Shielding	

Issued Date: 9 September 2024

SOIL PROFILE

BOREHOLE 1: 0 - 200 topsoil; 200 - 1200 clayey SAND with gravel - brown / red; 1200 - 2200 (Silty GRAVEL with sand with 10.5% linear shrinkage and 46% passing the 0.425mm sieve) - brown / red; 2200 clayey hard ground refusal.

BOREHOLE 2: 0 - 200 topsoil; 200 - 800 clayey SAND with gravel - brown / red; 800 - 1500 sandy CLAY with gravel - brown / red; 1500 end of hole.

BOREHOLE 3: 0 - 200 topsoil; 200 - 900 clayey SAND with gravel - brown / red; 900 - 1500 sandy CLAY with gravel - brown / red; 1500 end of hole.

APPROXIMATE BOREHOLE LOCATIONS



NOTE 1 Explanatory Notes & Standard Recommendations

This site classification report must be read in conjunction with the applicable Explanatory Notes & Standard Recommendations. For A Class sites, refer to the Explanatory Notes and Standard Recommendations for Stable (A Class) Sites, version 1.1 August 2021. For S, M, H1, H2 & E Class sites, refer to the Explanatory Notes and Standard Recommendations for Reactive (S, M, H1, H2 & E Class) Sites version 1.1 August 2021. For Equivalent Class sites, refer to the Explanatory Notes and Standard Recommendations for Equivalent Class Sites, version 1.1 August 2021.

NOTE 2 Bushfire - Prone Area

The Site may be situated in a bush fire prone area in accordance with the Department of Fire and Emergency Services (DFES) Bushfire Prone Area Map (Reference:http://www.dfes.wa.gov.au/regulationandcompliance/bushfireproneareas/) the current version at the time of this assessment. A Bushfire Attack Level (BAL) assessment may be required for this site, please confirm with the local authority. Should you require an assessment, please contact this Office.

ADDITIONAL NOTES / REQUIREMENTS

Site Condition

At the time of inspection the site was considered to be sloping and covered with grass. For specific levels of this site or topographical features, please refer to a professional sites survey.

Sample Retrieval Probe

This report has been prepared using the Sample Retrieval Probe. A number of boreholes are conducted across the site or building area, in order to determine the soil profiles and provide a representation of the ground conditions. Where reactive material is encountered within the zone of influence, laboratory analysis is conducted in accordance with AS1289 3.1.2, 3.2.1, 3.3.1, 3.4.1 and 3.6.1.

Base Assessment

The cut base shall be inspected by a representative from this office prior to the placement of the sand pad. The requirement for sub-soil drains and waterproof membrane will be determined at the time of the base

Signed:

Gervase Purich
Chief Executive Officer

assessment.

Internal Thickenings
Internal thickenings are required for the proposed residence as specified on the recommended footing detail. Please provide a copy of the architectural drawings to this Office, so that the internal thickenings can be designed and drawn in accordance with AS2870.

Internal Thickening Inspection
This detail is subject to a internal thickening layout inspection. It is recommended that an inspection be conducted by a representative from this Office prior to concrete pour.

-- END OF REPORT --

Signed: 
Gervase Purich
Chief Executive Officer

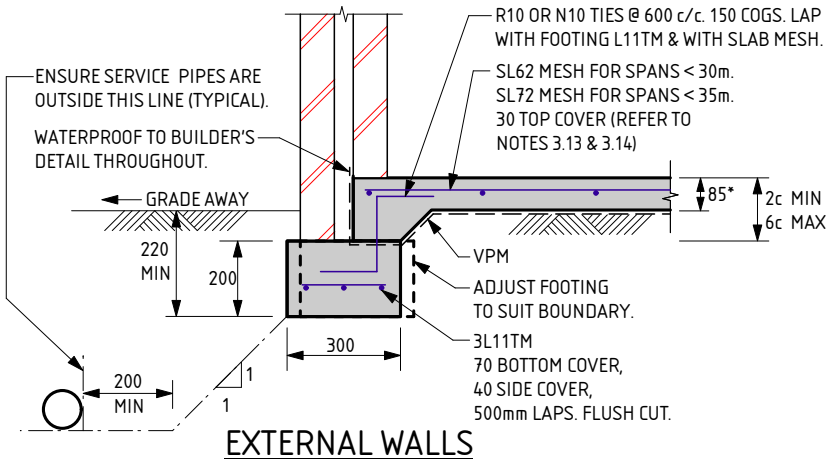

EXTERNAL WALLS

* 100mm SLAB MAY BE INSTALLED INSTEAD OF 85mm.
IF 100mm SLAB USED, MESH TO BE:
SL62 MESH FOR SPANS < 25m.
SL72 MESH FOR SPANS < 30m.
SL82 MESH FOR SPANS < 35m.

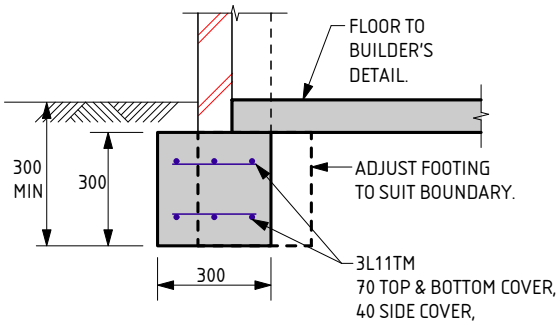

GARAGE WALL

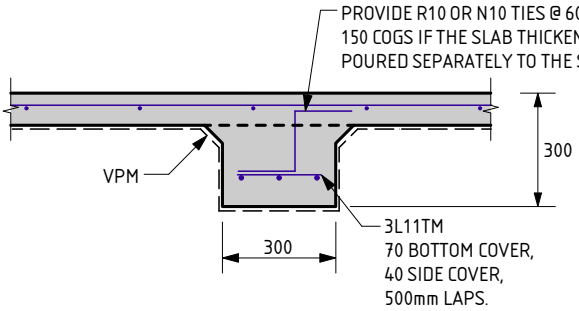

INTERNAL THICKENING

REFER TO STRUCTERRE'S DRAWINGS FOR PLACEMENT OF INTERNAL THICKENINGS. LOCATIONS TO BE CONFIRMED ON SITE BY STRUCTERRE PRIOR TO CONCRETE POUR.

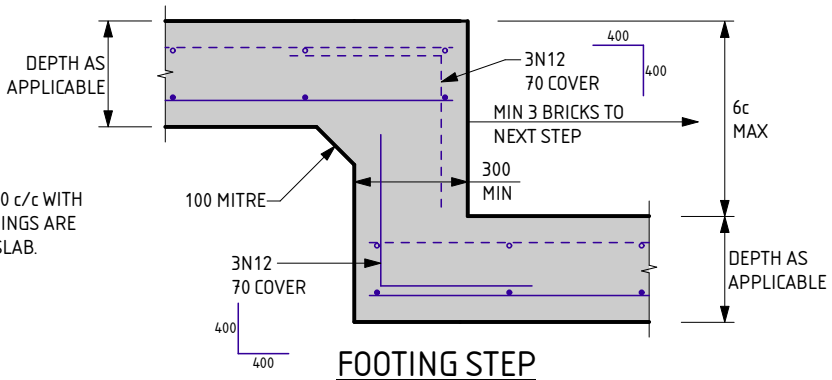

FOOTING STEP

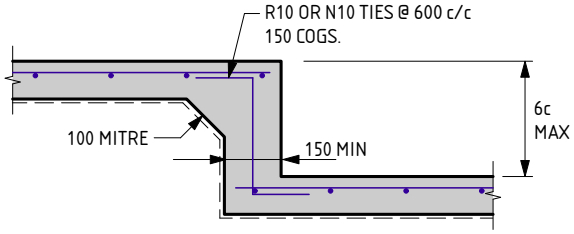

SLAB STEP

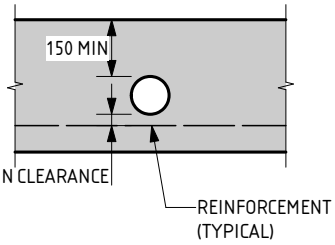

OPTION A
PENETRATION CLEAR OF REINFORCEMENT

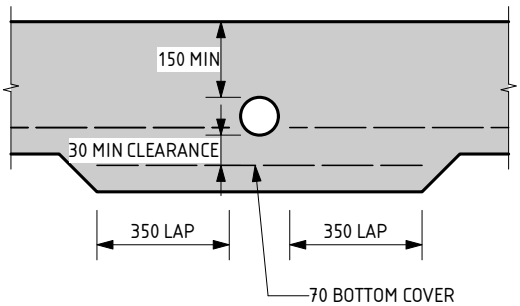

OPTION B
PENETRATION INTERRUPTS REINFORCEMENT

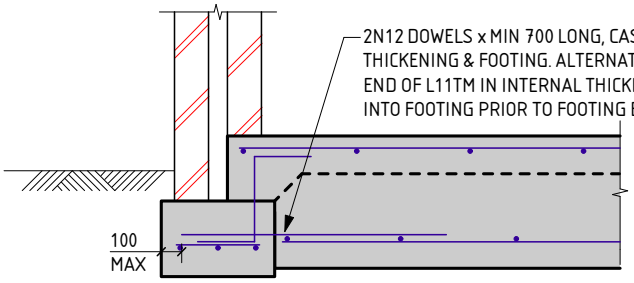

EXTERNAL FOOTING TO INTERNAL THICKENING

THIS DETAIL IS EQUIVALENT TO STRUCTERRE FOOTING DETAIL C4©

SERVICE PIPE DIAGRAM

- MAXIMUM PENETRATION SIZE TO BE Ø150.

NOTE:
THESE FOOTING DETAILS ARE TO BE READ IN CONJUNCTION WITH THE REACTIVE SITE NOTES.

THE APPROVED SIGNATURE ON THIS DETAIL ENDORSES ITS USE FOR SINGLE STOREY BUILDINGS ON BUILDING PLATFORMS WITH UP TO 11mm OF SURFACE MOVEMENT.

DATE LAST MODIFIED - 19/01/23

CM3
CAVITY MASONRY

STRUCterre consulting engineers
Zemla Pty. Ltd. (ABN: 71 349 772 837) ATF the Young Purich and Higham Unit Trust trading as Structerre Consulting Engineers
1 ERINDALE ROAD, BALCATTA W.A. 6021
TEL (08) 9205 4500 FAX (08) 9205 4541 EMAIL: perth@structerre.com.au

PROJECT: LOT 61 SHEARING RISE WUNDOWIE
CLIENT: WA COUNTRY BUILDERS
SCALE 1:20
DATE 9/9/24
APPROVED

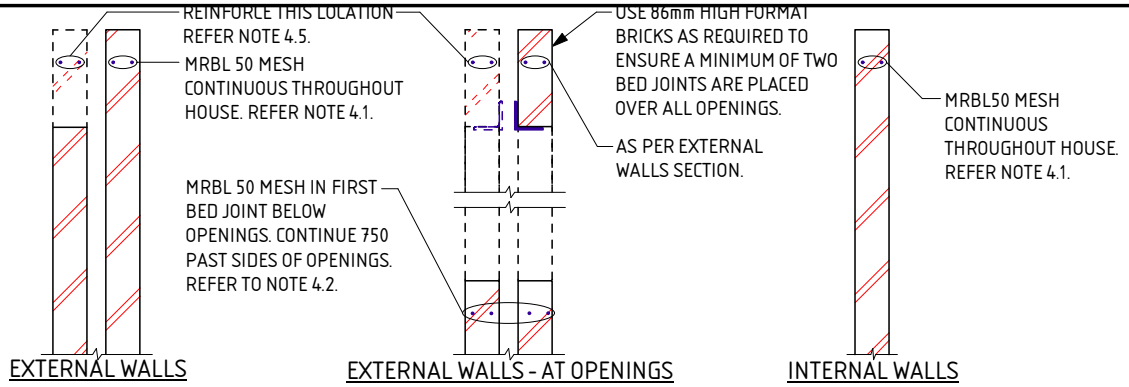

TYPICAL WALL SECTIONS

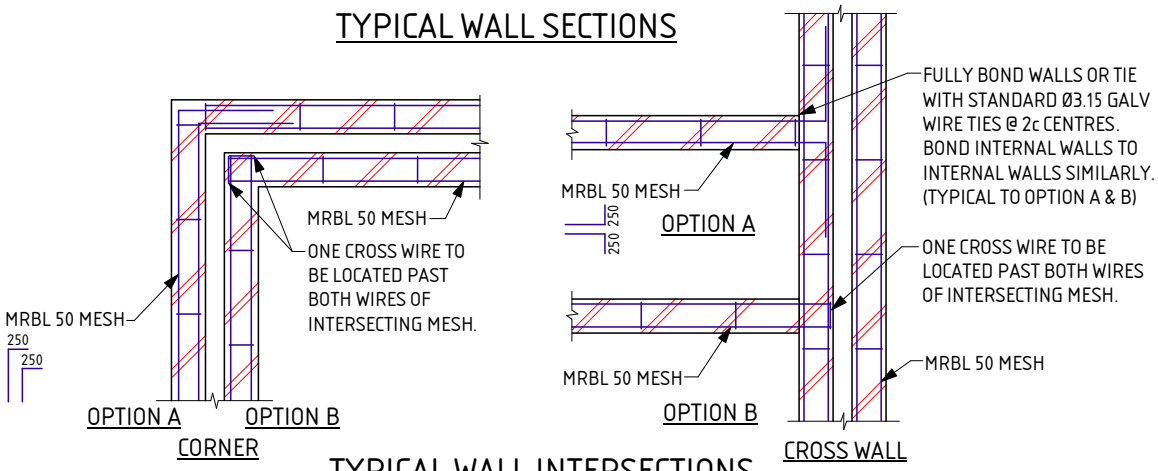

TYPICAL WALL INTERSECTIONS

REACTIVE SITE NOTES FOR CM1 - CM7

THESE NOTES ARE TO BE READ IN CONJUNCTION WITH THE ATTACHED FOOTING DETAILS.

1.0 SITE CLASSIFICATION
- 1.1 REFER TO ATTACHED CERTIFICATE OF INSPECTION FOR SITE CLASSIFICATION. THE SITE CLASSIFICATION NOTED, IS AS DEFINED IN AS2870 - RESIDENTIAL SLABS & FOOTINGS.
- 1.2 THE SITE CLASSIFICATION HAS BEEN DETERMINED BY INVESTIGATION OF THE SITE, AS PER THE ATTACHED CERTIFICATE OF INSPECTION. REFER TO THE ATTACHED CERTIFICATE FOR ANY SPECIAL REQUIREMENTS.

2.0 EARTHWORKS
- 2.1 SAND PAD IF APPLICABLE TO BE AS PER SITE INSPECTION REPORT.
- 2.2 EARTHWORKS SHALL INCLUDE, BUT NOT BE LIMITED TO:
  - a) REMOVE ALL ORGANIC MATERIAL FROM THE PAD AREA.
  - b) REMOVE ALL RUBBISH AND DELETERIOUS FILL (SUCH AS CLAY FILL) FROM THE PAD AREA.
  - c) GRUB OUT ANY TREES WHERE NECESSARY AND ENSURE THE REMAINING HOLES ARE FILLED AND COMPACTED SATISFACTORILY WITH SAND.
  - d) NOTIFY THE ENGINEER OF ANY UNUSUAL FEATURES OR DISCREPANCIES WHICH MAY BECOME EVIDENT DURING EARTHWORKS, PRIOR TO PROCEEDING.
- 2.3 ANY PREDOMINANT ROCK IN THE HOUSE PAD AREAS IS TO BE INSPECTED BY THE ENGINEER.
- 2.4 ANY CUT TO THE SITE, OTHER THAN TOPSOIL STRIPPING, WILL REQUIRE THE PREPARED CUT BASE TO BE INSPECTED AND APPROVED BY THE ENGINEER.
- 2.5 MAXIMUM SAND PAD DEPTH NOT TO EXCEED 150% OF MINIMUM PAD DEPTH OR 2000mm WITHOUT THE ENGINEER'S APPROVAL.
- 2.6 IF APPLICABLE SAND FILL TO BE CLEAN WELL DRAINED, WITH MAX FINES (PARTICLES UP TO 0.075mm) CONTENT OF 5%. SAND TO BE COMPACTED TO A MIN 6 BLOWS/300mm FOR THE DEPTH OF THE PAD OR TO DISCRETION OF ENGINEER.
- 2.7 COMPACTION TESTING TO BE PERFORMED BY STRUCTERRE.

3.0 FOOTINGS & SLABS
- 3.1 FOOTINGS ARE TO BE PLACED DIRECTLY INTO SAND PAD OF SPECIFIED THICKNESS.
- 3.2 ALL STORMWATER MUST BE DISCHARGED INTO COUNCIL DRAINS OR A MINIMUM OF 3m FOR S CLASS SITES, 4m FOR M CLASS SITES AND 5m FOR H1 & H2 CLASS SITES, AWAY FROM THE RESIDENCE AND/OR ADJACENT BUILDINGS INTO SOAKWELLS. IF THIS RESTRICTION CANNOT BE ACHIEVED REFER BACK TO THIS OFFICE FOR AN ALTERNATIVE DESIGN. WHERE THE SITE HAS BEEN CLASSIFIED AS AN 'EQUIVALENT' SITE CLASSIFICATION, REFER TO 'EXPLANATORY NOTES & STANDARD RECOMMENDATIONS - EQUIVALENT CLASS SITES' FOR STORMWATER DRAINAGE REQUIREMENTS UNLESS SPECIFIED OTHERWISE.
- 3.3 EXCAVATIONS FOR ALL SERVICE PIPES NOT TO UNDERMINE FOOTINGS. IF UNDERMINING IS LIKELY TO OCCUR, CONTACT THE ENGINEER PRIOR TO PROCEEDING.
- 3.4 WHERE PLUMBING PIPES PASS THROUGH FOOTINGS OR SLAB, SPECIFIED TOTAL THICKNESS OF ALL CONCRETE IS ALWAYS TO BE MAINTAINED.
- 3.5 SETDOWN AT WET AREA TO ARCHITECTURAL REQUIREMENT (50mm MAX). MAINTAIN 85mm SLAB THICKNESS. FOLD MESH DOWN TO MAINTAIN COVER, PLACE DIAGONAL BARS AT RE-ENTRANT CORNER FOR STEPS OVER 30mm. BARS TO BE N12 x 1200 LONG.
- 3.6 REINFORCEMENT SHALL BE IN ACCORDANCE WITH THE FOLLOWING STANDARDS;
  - L INDICATES PLAIN OR DEFORMED WIRE R500L OR D500L TO AS/NZS 4671.
  - SL INDICATES DEFORMED SQUARE MESH D500L TO AS/NZS 4671.
  - N INDICATES DEFORMED BARS D500N TO AS/NZS 4671.
  - TM SUFFIX INDICATES TRENCH MESH USING DEFORMED BARS D500L TO AS/NZS 4671.

  ALL STEELWORK TO BE TREATED IN ACCORDANCE WITH TABLE 3.4.4.4 "CORROSION PROTECTION" OF THE BUILDING CODE OF AUSTRALIA.
- 3.7 LAP ALL MESH TWO TRANSVERSE WIRES PLUS 25mm OR TO MANUFACTURER'S SPECIFICATIONS.
- 3.8 CONCRETE TO CONFORM WITH AS 3600.
- 3.9 BLENDED CEMENT TO CONFORM WITH AS1317.
- 3.10 ALL CONCRETE TO BE N20/20/100.
- 3.11 FOR ISOLATED PAD FOOTINGS, REFER BACK TO ENGINEER.
- 3.12 FOOTING POSITION UNDER BRICKWORK CAN BE ADJUSTED TO SUIT PARAPET WALLS.
- 3.13 FOR SLAB SPANS > 35m REFER TO ENGINEER FOR MESH SIZE.
- 3.14 IF THE LENGTH TO WIDTH RATIO OF THE GROUND SLAB OR ANY PART OF THE GROUND SLAB EXCEEDS 3:1, REFER BACK TO THIS OFFICE FOR MESH SIZE.
- 3.15 IF POLISHED (OR HONED) CONCRETE FINISHES ARE DESIRED, THIS DESIGN SHOULD BE REFERRED BACK TO THIS OFFICE FOR CONSIDERATION, AS IT IS NOT THE INTENTION OF THESE DESIGNS FOR SUCH FINISHES.
- 3.16 PLACE SLAB THICKENING (300 WIDE x 250 DEEP) UNDER INTERNAL WALLS (90 OR 110) HIGHER THAN 3.7m WHERE GREATER THAN 1m FROM INTERNAL THICKENING. PROVIDE SAME TRENCH MESH AS INTERNAL THICKENING DETAIL, WHERE REQUIRED.
- 3.17 PIERCING THE VAPOUR BARRIER (VPM) USING LEVELLING PINS ON FREE DRAINING SAND PADS IS ALLOWABLE.
- 3.18 CURE SLAB AS DETERMINED BY ENGINEER.
- 3.19. THE SLAB IS CONSIDERED SUITABLE AS A PHYSICAL BARRIER AGAINST INGRESS OF TERMITES. IF THE FOOTING AND SLAB IS PLACED IN 2 POURS, THE PHYSICAL BARRIER ALSO INCLUDES THE FOOTING AND SLAB JUNCTION.
- 3.20 THIS DESIGN IS IN ACCORDANCE WITH AS2870 SECTIONS 4.4 AND 4.6, AND THE EXPECTED PERFORMANCE IS AS PER CLAUSE 1.3 OF AS2870.

4.0 MASONRY
- 4.1 PLACE MRBL50 MESH IN TOP BED JOINT CONTINUOUS THROUGHOUT ALL BRICKWORK.
- 4.2 REINFORCE BED JOINT BELOW WINDOW SILLS WITH MRBL50 MESH. CONTINUE 750 PAST SIDES OF OPENING.
- 4.3 LAP 250 AT SPLICES AND AROUND CORNERS AND COG 250 INTO INTERSECTING WALLS. 20mm COVER TO ALL WIRES.
- 4.4 ALL MESH IN EXTERNAL FACE OF EXTERNAL LEAF TO BE GALVANIZED TO AS/NZS 4680.
- 4.5 WHEN BRICKWORK EXTENDS ABOVE OPENINGS TO EXTERNAL LEAF REINFORCE AS PER CLAUSE 4.1, 4.2 & 4.3.
- 4.6 TYPICAL WALL SECTIONS ARE SHOWN FOR 28C INTERNAL CEILINGS. WHERE THERE ARE 3 OR MORE BED JOINTS OVER THE OPENING, REINFORCE BED JOINT OVER OPENING WITH MRBL50 MESH. CONTINUE 750 PAST SIDE OF OPENING.
- 4.7 ALL PERPENDS TO BE FULLY MORTARED.
- 4.8 A BRICK COURSE, AS REFERRED TO IN THIS DOCUMENT IS STANDARD 86mm HIGH.
- 4.9 2L6 WIRES MAY BE USED AS AN ALTERNATIVE TO THE MRBL50 MESH. WHERE L6 WIRES ARE USED, ALL SPLICES AND COGS TO BE 500 LONG.

5.0 MAINTENANCE
- 5.1 IT IS CONSIDERED THAT THIS DESIGN IS SUITABLE FOR THE FOUNDATION CONDITIONS TO BE ENCOUNTERED AND WILL ADEQUATELY CONTROL ANY CRACKING OF BRICKWORK AND CONCRETE, SUBJECT TO THE MAINTENANCE PROCEDURES BELOW BEING SATISFIED.
- 5.2 BUILDER TO ENSURE THAT CLIENT BE INFORMED OF NECESSITY TO MAINTAIN DRAINS IN GOOD WORKING ORDER AT ALL TIMES.
- 5.3 BUILDER TO ADVISE CLIENT TO CONSULT AN ENGINEER BEFORE PLANTING TREES OR SHRUBS WITHIN 2.5m, OR A DISTANCE EQUAL TO THE ANTICIPATED MAXIMUM HEIGHT OF THE TREE, OF THE BUILDING.
- 5.4 SITE TO BE MAINTAINED AS PER CSIRO INFORMATION PAMPHLET BTF 18 & STRUCTERRE'S CLAY FACT SHEET.
- 5.5 AS2870 AND 'CSIRO PAMPHLET BTF 18' COVER THE EXPECTED PERFORMANCE AND RESPONSIBILITIES OF ALL PARTIES WITH THE USE OF THESE DETAILS.

6.0 QUALITY CONTROL PROGRAM REQUIREMENTS
- 6.1 WORKING SLAB DEPTH AS INDICATED ON THE DETAIL. SLAB DEPTH TOLERANCE ALLOWABLE -10mm, +15mm.
- 6.2 WHERE DEPTH IS BELOW NOMINATED DEPTH, MAX AREA ALLOWED TO BE ≤ 5% OF THE TOTAL AREA.
- 6.3 DEPTH TESTING LOCATIONS TO BE NO CLOSER THAN 1000mm APART.
- 6.4 SLAB DEPTH IS TO BE PART OF A QUALITY CONTROL INSPECTION REGIME.
- 6.5 SLAB AND FOOTING CAN BE POURED MONOLITHICALLY IF DESIRED.

DATE LAST MODIFIED - 19/01/23

STRUCterre consulting engineers
Zemla Pty. Ltd. (ABN: 71 349 772 837) ATF the Young Purich and Higham Unit Trust trading as Structerre Consulting Engineers
1 ERINDALE ROAD, BALCATTA W.A. 6021
TEL (08) 9205 4500 FAX (08) 9205 4541 EMAIL: perth@structerre.com.au

PROJECT: LOT 61 SHEARING RISE WUNDOWIE

CLIENT: WA COUNTRY BUILDERS

SCALE 1:20

DATE 9/9/24

APPROVED

EXPLANATORY NOTES AND STANDARD RECOMMENDATIONS REACTIVE (S, M, H1, H2 & E CLASS) SITES (Sheet 1 of 2)

GENERAL

1. THE EXPLANATORY NOTES AND THE STANDARD RECOMMENDATIONS ARE TO BE READ IN CONJUNCTION WITH THE SITE CLASSIFICATION REPORT.
2. ALL REFERRED STANDARDS TO BE THE CURRENT VERSION AT THE TIME OF THE CONSTRUCTION.
3. THE PURPOSE OF THE SITE CLASSIFICATION REPORT IS TO CLASSIFY THE SITE IN ACCORDANCE WITH AS2870 "RESIDENTIAL SLABS AND FOOTING". IT IS NOT INTENDED FOR ANY OTHER PURPOSE, INCLUDING SOLE INFORMATION IN THE PROVISION OF A QUOTATION FOR SITE WORKS BY EARTH WORKERS. IT IS RECOMMENDED EARTH WORKERS PERFORM THEIR OWN INVESTIGATION FOR QUOTATION PURPOSES.
4. THE SITE CLASSIFICATION REPORT WILL INCLUDE BUT IT IS NOT LIMITED TO:
    a. THE SITE CLASSIFICATION IN ACCORDANCE WITH AS2870 "RESIDENTIAL SLABS AND FOOTING",
    b. A WIND RATING IN ACCORDANCE WITH AS4055 "WIND LOADS FOR HOUSING",
    c. A COASTAL CORROSION CLASSIFICATION,
    d. ADDITIONAL EARTHWORK RECOMMENDATIONS WHERE APPLICABLE,
    e. STANDARD FOOTING DESIGN FOR SINGLE STOREY SLAB ON GROUND CONSTRUCTION.
5. THE SITE CLASSIFICATION BASED ON THE SITE AS PRESENTED AT THE TIME OF THE ASSESSMENT. THE SITE CLASSIFICATION AND RECOMMENDATIONS INCLUDED IN THE REPORT ARE IS SUBJECT TO SATISFACTORY COMPLETION OF RECOMMENDED EARTHWORKS, (REFER NOTE 16) AS A MINIMUM. SHOULD CHANGES TO THE SITE OCCUR, OTHER THAN THE RECOMMENDATIONS INCLUDED IN THE SITE CLASSIFICATION REPORT, REFER BACK TO THIS OFFICE FOR REVIEW OF CLASSIFICATION AND FOOTING DESIGN.
6. ALL RECOMMENDATIONS GIVEN IN THE SITE CLASSIFICATION REPORT HAVE BEEN DETERMINED FROM THE INFORMATION THAT WAS AVAILABLE TO THIS OFFICE AT THE TIME OF INVESTIGATION. IF FURTHER INFORMATION RELATING TO THE SITE OR DEVELOPMENT BECOMES AVAILABLE, THESE RECOMMENDATIONS ARE SUBJECT TO CHANGE.
7. THE REACTIVITY OF THE DIFFERENT SITE CLASS ARE AS FOLLOWS:
   CLASS S SITES ARE SLIGHTLY REACTIVE WITH AN EXPECTED SURFACE MOVEMENT OF BETWEEN 0mm AND 20mm.
   CLASS M SITES ARE MODERATELY REACTIVE WITH AN EXPECTED SURFACE MOVEMENT OF BETWEEN 20mm AND 40mm.
   CLASS H1 SITES ARE HIGHLY REACTIVE WITH AN EXPECTED SURFACE MOVEMENT OF BETWEEN 40mm AND 60mm
   CLASS H2 SITES ARE HIGHLY REACTIVE WITH AN EXPECTED SURFACE MOVEMENT OF BETWEEN 60mm AND 75mm
8. BOREHOLES EXCAVATED REVEAL THE SOIL PROFILE AT THE BOREHOLE LOCATION ONLY. FROM THIS, IT IS INFERRED THAT THESE ARE THE SOIL CONDITIONS OVER THE SITE. VARIATIONS CAN OCCUR WHICH MAY NOT HAVE BEEN DETECTED AT THE INVESTIGATION STAGE. ANY ANOMALIES SHOULD BE REFERRED BACK TO THIS OFFICE FOR REASSESSMENT.
9. A NUMBER OF BOREHOLES ARE CONDUCTED ACROSS THE SITE TO DETERMINE THE SOIL PROFILES AND PROVIDE A REPRESENTATION OF THE GROUND CONDITIONS.
10. THIS REPORT IS FOR STRUCTERRE ONLY TO USE IN DESIGN. ANY DESIGN BY ANYONE ELSE FOR ANY STRUCTURE MUST BE SPECIFICALLY APPROVED BY STRUCTERRE. IF USED BY ANYONE ELSE FOR ANYTHING OTHER THAN A STRUCTERRE DESIGN OR STRUCTURE, STRUCTERRE TAKES NO RESPONSIBILITY.

SAND PAD

11. THE ADDITION OF A SAND PAD CAN MODIFY THE EXPECTED SURFACE MOVEMENT FROM SEASONAL MOISTURE CHANGES, (YS), AND CAN CHANGE THE SITE CLASSIFICATION OF THE SITE FROM THAT PRESENTED. THE EXPECTED SURFACE MOVEMENT IS RE-CALCULATED INCORPORATING THE RECOMMENDED SAND PAD, AS OUTLINED ON THE SITE CLASSIFICATION REPORT, AND THE RECOMMENDED FOOTING DESIGN IS BASED ON THIS MODIFIED EXPECTED SURFACE MOVEMENT. THEREFORE, THE RECOMMENDED FOOTING DESIGN IS ONLY TO BE USED IN CONJUNCTION WITH THE RECOMMENDED SAND PAD AND EARTHWORKS AS OUTLINED IN THE SITE CLASSIFICATION REPORT.
12. THE RECOMMENDATIONS FOR THE SAND PAD IS FOR STRUCTURAL PURPOSES ONLY, AND DOES NOT PROVIDE THE MINIMUM FINISHED PAD LEVEL IN RELATION TO FLOOD LEVELS, OR DEPTH TO GROUNDWATER. MAXIMUM GROUNDWATER SHALL BE MINIMUM 750mm BELOW FINISHED LEVEL. SHOULD THE TEST BE LOCATED IN A LOW LYING OR FLOOD PRONE AREA, REFER TO THE LOCAL AUTHORITY FOR MINIMUM BUILDING HEIGHT.
13. IMPORTED FILL FOR USE AS A SAND PAD TO BE IN ACCORDANCE TO AS 3798 "GUIDELINES ON EARTHWORKS FOR COMMERCIAL AND RESIDENTIAL DEVELOPMENTS" WHICH INCLUDES BUT IS NOT LIMITED TO: BE FREE FROM ANY DELETERIOUS MATERIALS INCLUDING ORGANICS, (ROOTS, STUMPS, GRASSES, DECOMPOSED ORGANICS – PEAT, TIMBER, ETC), BUILDING RUBBLE, GLASS, PLASTICS OR WASTE MATERIAL. THE FINES CONTENT, (PERCENTAGE PASSING THE 0.075mm SIEVE) TO BE LESS THAN 5% BY MASS.
14. TYPICALLY, THE DEPTHS OF NON-REACTIVE SAND COVER REQUIRED OVER THE REACTIVE SOIL PROFILE FOR EACH CLASS IS AS FOLLOWS:
   S CLASS – MINIMUM 600mm
   M CLASS – MINIMUM 800mm
   H1 & H2 CLASS – MINIMUM 1000mm
15. SAND PAD TO EXTEND BEYOND BUILDING AREA A MINIMUM OF 1.5 TIMES THE PAD DEPTH. RECOMMENDED SAND PAD DEPTH IS ABOVE THE HIGHEST POINT, UNLESS OTHERWISE SPECIFIED.
16. IT IS REQUIRED THAT EARTHWORKS CONFIRM THAT THE MINIMUM DEPTH OF RECOMMENDED SAND PAD IS ACHIEVED.

EARTHWORKS

17. RECOMMENDED EARTHWORKS TO BE CONDUCTED IN ACCORDANCE WITH AS3798 "GUIDELINES ON EARTHWORKS FOR COMMERCIAL AND RESIDENTIAL DEVELOPMENTS", AND TO INCLUDE BUT NOT BE LIMITED TO:
    a. REMOVAL OF ALL VEGETATION, TOPSOILS, UNCONTROLLED FILLS AND OTHER DELETERIOUS MATERIALS FROM THE BUILDING AREA,
    b. GRUBBING OUT OF ANY TREES ENSURING THE REMAINING HOLES ARE BACKFILLED WITH CLEAN COMPACTED SAND,
    c. NOTIFYING THE ENGINEER OF ANY UNUSUAL FEATURE OR DISCREPANCY THAT MAY BECOME EVIDENT DURING EARTHWORKS, PRIOR TO PROCEEDING,
    d. COMPACTING TO MEET THE REQUIREMENTS AS OUTLINED IN AS 3798 TABLE 5.1.
18. FILL MATERIAL (WHICH IS NOT ALWAYS APPARENT AT THE INITIAL INVESTIGATION STAGE) IS TO DEALT WITH AS FOLLOWS:
    a. IF IT IS CERTIFIED BY OTHERS IT CAN REMAIN.
    b. IF IT IS NOT CERTIFIED WILL REQUIRED REMOVAL DOWN TO NATURAL GROUND OR VERIFIED. ANY SAND CAN BE REUSED.
    c. IF A PAD HAS ALREADY BEEN CONSTRUCTED, THE SITE CLASSIFICATION IS NOT CERTIFICATION OF THE PAD. THAT IS TO BE CERTIFIED BY OTHER UNLESS SPECIFICALLY REQUESTED.
19. ANY ORGANIC MATTER OR ROOTS ENCOUNTERED, WHICH IS BEYOND WHAT IS NORMALLY CONSIDERED ACCEPTABLE IS TO BE REMOVED. THIS WILL NECESSITATE RAKING THE SITE TO REMOVE ORGANIC MATERIAL, TURNING THE SITE OVER AND RE-COMPACTING TO A MINIMUM.

RETAINING WALLS

20. AN ASSESSMENT OF ANY EXISTING OR PROPOSED RETAINING WALLS HAS NOT BEEN CONDUCTED AS PART OF THIS SITE CLASSIFICATION REPORT.
21. IF THE PROPOSED BUILDING IS TO BE LOCATED AT A CLOSER DISTANCE TO A RETAINING WALL THAN THE HEIGHT OF THE RETAINING WALL, THIS MAY PLACE ADDITIONAL LOADS ON THE WALL THAT WERE NOT INITIALLY DESIGNED FOR. AN INSPECTION OF THE STRUCTURAL INTEGRITY OF THE RETAINING WALL WILL BE REQUIRED TO PROVIDE CERTIFICATION AND/OR RECOMMENDATIONS PRIOR TO ANY CONSTRUCTION. PLEASE REFER BACK TO THIS OFFICE FOR ASSISTANCE.

STORMWATER DRAINAGE

22. ALL STORMWATER MUST BE DISCHARGED INTO COUNCIL DRAINS OR A MINIMUM OF 3m FOR S CLASS SITES, 4m FOR M CLASSES AND 5m FOR H1 & H2 CLASS SITES AWAY FROM THE RESIDENCE AND/OR ADJACENT BUILDINGS TO THE SOAKWELLS. IF THIS CANNOT BE ACHIEVED REFER BACK TO THIS OFFICE FOR AN ALTERNATIVE DESIGN.

DOC # SS001 - 1.1.4 V1.1 - AUGUST 2021

STRUCterre consulting engineers
Zemla Pty. Ltd. (ABN: 71 349 772 837) ATF the Young Purich and Higham Unit Trust trading as Structerre Consulting Engineers
1 ERINDALE ROAD, BALCATTA W.A. 6021
TEL (08) 9205 4500 FAX (08) 9205 4541 EMAIL: perth@structerre.com.au

PROJECT: LOT 61 SHEARING RISE WUNDOWIE

CLIENT: WA COUNTRY BUILDERS

SCALE 1:20

DATE 9/9/24

APPROVED

EXPLANATORY NOTES AND STANDARD RECOMMENDATIONS REACTIVE (S, M, H1, H2 & E CLASS) SITES (Sheet 2 of 2)

WIND CLASSIFICATION

23. WIND CLASSIFICATION IS GIVEN FOR THE EXPECTED CONDITION 5 YEARS HENCE. THIS CLASSIFICATION IS LIMITED TO BUILDING CLASSES 1 AND 10, WHICH HAVE THE FOLLOWING LIMITATION (AS PER AS4055):
    a. MAXIMUM DISTANCE FROM THE GROUND LEVEL TO THE UNDERSIDE OF EAVES SHALL NOT EXCEED 6.0m.
    b. MAXIMUM DISTANCE FROM GROUND LEVEL TO THE HIGHEST POINT OF THE ROOF, EXCLUDING CHIMNEYS, SHALL NOT EXCEED 8.5m.
    c. THE ROOF PITCH SHALL NOT EXCEED 35 °.
    d. THE WIDTH, EXCLUDING EAVES, SHALL NOT EXCEED 16.0m AND THE LENGTH SHALL NOT EXCEED 5x THE WIDTH.

    IF THE BUILDING FALLS OUTSIDE OF THESE LIMITATIONS, THE STATED WIND CLASSIFICATION DOES NOT APPLY. REFER BACK TO THIS OFFICE FOR A REVISED WIND CLASSIFICATION.

ENVIRONMENTAL

24. NO ENVIRONMENTAL ASSESSMENT OF THIS SITE HAS BEEN UNDERTAKEN. SHOULD AN ENVIRONMENTAL ASSESSMENT BE REQUIRED, IT IS RECOMMENDED THAT AN ENVIRONMENTAL ENGINEER BE ENGAGED.

SEISMIC

25. RECOMMENDED FOOTING DETAIL ARE SUITABLE FOR SEISMIC CONDITIONS WITH AN EARTHQUAKE HAZARD FACTOR OF ≤0.11. RECOMMENDED FOOTING DETAILS PROVIDED FOR SITES WITH AN EARTHQUAKE HAZARD FACTOR OF >0.11, ARE NOT FOR CONSTRUCTION, BUT FOR COSTING PURPOSES ONLY. IT IS REQUIRED THAT A FULL SEISMIC DESIGN IS CONDUCTED.

SITE DRAINAGE

26. SUBSOIL DRAINAGE MAY BE REQUIRED ON REACTIVE SITES. SUBSOIL DRAINAGE IS TO CONSIST OF 90mm Ø SLOTTED PIPE OR SIMILAR IN A 600mm DEEP TRENCH WITH AN AGGREGATE FILTER CONSISTING OF SINGLE SIZED (50mm TO 14mm) AGGREGATE AND GEO-TEXTILE FABRIC, OR SIMILAR. IT IS TO BE LOCATED A MINIMUM OF 600mm AWAY FROM THE BUILDING. ANY WATERPROOF MEMBRANE IS TO BE DRAPED INTO THE TRENCH FOR ITS FULL DEPTH. IF ROCK IS ENCOUNTERED, THE ENGINEER MAY REDUCE THE DEPTH OF THE TRENCH. THE REQUIREMENTS FOR SUBSOIL DRAINAGE IS TO BE DETERMINED AT THE TIME OF THE BASE INSPECTION.
27. PROVIDE SURFACE CUT-OFF DRAINS TO CONTROL SURFACE RUN-OFF TO PREVENT IT FLOWING ONTO THE PAD/BUILDING AREA. SURFACE DRAINS ARE APPROXIMATELY 300mm DEEP LOCATED UP SLOPE OF ANY CUT, AND SHAPED TO THE REDIRECT SURFACE WATER FLOW AWAY FROM THE BUILDING ENVELOPE.
28. THE PREPARED BASE MAY NEED TO BE INSPECTED AND APPROVED BY THIS OFFICE. ANY VARIATIONS TO THE GROUND CONDITIONS FROM THE INITIAL ASSESSMENT MAY REQUIRES CHANGES TO THE RECOMMENDED FOUNDATION DETAILS AND/OR SAND PAD REQUIREMENTS. THIS WILL BE DETERMINED AT THE TIME OF THE BASE INSPECTION. THE BASE IS TO BE DOMED AND GRADED WITH A FALL OF AT LEAST 1:100 SO IT CANNOT POND WATER.
29. WHEN CONSTRUCTING THE BUND, ENSURE IT HAS ADEQUATE OPENINGS SUCH IT CANNOT DAM WATER, SUCH AS A SAND KEEL OR PLACE SUBSOIL DRAINAGE THROUGH THE BUND. ENSURE THAT ANY BUND IS OUTSIDE THE ZONE OF INFLUENCE OF THE FOUNDATIONS OF THE RESIDENCE. IT IS RECOMMENDED THAT THE HEEL OF THE BUND IS AT LEAST THE DEPTH OF THE PAD AWAY PLUS 1m AT ANY POINT OF MEASUREMENT, FROM THE BUILDING.
30. DURING AND AFTER WET PERIODS, REACTIVE SITES MAY BECOME WATERLOGGED, DIFFICULT TO WORK OR BOGGY AND MAY NEED TO BE POSTPONED TO ALLOW SOME DRYING TO ENABLE WORKS TO PROCEED. SHOULD THIS OCCUR, PLEASE CONTACT THE ENGINEER.

MAINTENANCE

31. REFER TO THE CSIRO BROCHURE BTF 18, STRUCTERRE CLAY FACT SHEET AND APPENDIX B OF AS2870 FOR EXPECTED MAINTENANCE REQUIREMENTS AND PERFORMANCE EXPECTATIONS.

CORROSION CLASSIFICATION

32. THE CORROSION CLASSIFICATION HAS BEEN ASSESSED IN ACCORDANCE WITH AS3700.

STRUCterre consulting engineers
Zemla Pty. Ltd. (ABN: 71 349 772 837) ATF the Young Purich and Higham Unit Trust trading as Structerre Consulting Engineers
1 ERINDALE ROAD, BALCATTA W.A. 6021
TEL (08) 9205 4500 FAX (08) 9205 4541 EMAIL: perth@structerre.com.au

PROJECT: LOT 61 SHEARING RISE WUNDOWIE

CLIENT: WA COUNTRY BUILDERS

SCALE 1:20

DATE 9/9/24

APPROVED

CLAY FACT SHEET

THIS FACT SHEET IS INTENDED FOR INFORMATION PURPOSES ONLY, FOR STRUCTERRE CONSULTING ENGINEERS' (STRUCTERRE) CLIENTS. IT IS NOT INTENDED FOR ANY OTHER PURPOSE AND SHALL NOT BE USED WITHOUT THE EXPRESS PERMISSION OF STRUCTERRE. IT IS OF A GENERAL NATURE ONLY AND DOES NOT REFER TO ANY SPECIFIC SITES, AS ALL SITES VARY AND ARE INDIVIDUAL. ANY SPECIFIC QUERIES SHOULD BE REFERRED TO AN ENGINEER.

ENSURE THAT ALL SURFACE DRAINS ARE FULLY MAINTAINED IN WORKING ORDER. IT IS IMPORTANT THAT THE SURFACE CUT OFF DRAIN BE KEPT OPEN TO ALLOW THE WATER TO DRAIN QUICKLY AND FREELY. GRASS TO BE KEPT TRIMMED AND ANY DEBRIS REMOVED DURING WINTER, AS IT BUILDS UP. ANY BLOCKAGE MAY CAUSE OVERFLOW AND THEN A POSSIBLE BREAK IN THE DRAIN, CAUSING WATER TO FLOW ONTO THE PAD.

ENSURE THAT ALL SUBSOIL DRAINS ARE FULLY MAINTAINED IN WORKING ORDER. THE SUB-SOIL DRAIN SHOULD BE REGULARLY CHECKED TO ENSURE THAT IS IS FUNCTIONING. THE OUTLET SHOULD BE LOCATED TO ALLOW FREE DRAINAGE AND PROTECTION FROM DAMAGE. ALL ROOF WATER IS TO BE PIPED AWAY FORM THE RESIDENCE. IT IS RECOMMENDED TO INSTALL A SEPARATE ROOF WATER DRAINAGE SYSTEM AND ONLY CONNECT INTO THE SUBSOIL DRAIN WHERE IT TURNS INTO A NORMAL DRAIN. STAND PIPES OR CONCRETE LINERS ARE USUALLY PLACED AT THE CHANGE OF DIRECTION OF THE SUB-SOIL DRAINS. THE LOCATIONS OF THESE SHOULD ALSO BE MAINTAINED, AS THEY ARE NECESSARY TO CARRY OUT CHECKS AND CLEAN THE SUB-SOIL DRAIN AS REQUIRED.

WHERE THE DRAINS PASS THROUGH THE BUND, THE OUTLETS ARE SOMETIMES COVERED WITH ERODED SOIL FROM THE BUND. THEREFORE, THESE NEED TO BE PROTECTED AND KEPT OPEN. A SMALL HEAD WALL SERVES TO PROTECT THE PIPE ENDS AND PREVENT BLOCKAGE.

AS THE CLAY BUND IS INITIALLY UNCONSOLIDATED, WITH TIME (ESPECIALLY DURING THE FIRST WINTER) IT WILL CONSOLIDATE. CRACKS MAY OCCUR BETWEEN THE CLAY BUND AND THE SAND, HOWEVER THIS IS NOT OF ANY SIGNIFICANT CONSEQUENCE AS THE BUND IS LOCATED OUTSIDE THE ZONE OF INFLUENCE OF THE FOUNDATIONS. WHEN CRACKS DO OCCUR, IT IS RECOMMENDED THAT THEY BE FILLED IN OR CAVED IN BY RODDING AND HOSING. THE CLAY BUND WILL NEED TO BE STABILISED EITHER BY STONE PITCHING, TERRACING OR PLANTING OF SURFACE COVER.

WHERE POSSIBLE PLACE IMPERVIOUS PATHS AROUND AND ADJACENT TO THE HOUSE GRADED SUCH THAT WATER WILL DRAIN AWAY FROM THE FOOTINGS AND NOT POND NEXT TO THE HOUSE. THE BENEFIT OF SUCH PATHS IS THAT IT WILL ASSIST IN CONTROLLING THE MOISTURE CONTENT OF THE CLAY FOUNDATION MORE UNIFORMLY THROUGHOUT THE YEAR. THUS LIMITING THE AMOUNT OF SWELLING AND SHRINKING OF THE CLAY (GENERALLY THE MAIN CAUSE OF CRACKING IN THE HOUSE).

JUST AFTER COMPLETION OF THE RESIDENCE, THERE WILL BE LOOSE OR UNSTABLE SOIL, WHICH WILL NEED TO BE STABILISED. THE CUT, WHICH MAY BE STEEP, MAY NEED RETAINING, STONE PITCHING OR CUTTING TO A LESSER ANGLE WHICH CAN BE STABILISED BY PLANTING SURFACE COVER IE: GRASS. STONE PITCHING DETAILS MUST BE DESIGNED BY AN ENGINEER. IT IS TO BE NOTED THAT AS THE CLAY BUND CONSOLIDATES, ANY STONE PITCHING WILL MOVE AND THIS WILL BE TAKEN INTO ACCOUNT WHEN DESIGNING AND BUILDING THE STONE PITCHING.

TERRACING IS A SUITABLE ALTERNATIVE TO ACHIEVE A STABLE SLOPE AND TO PROVIDE A SURFACE CUT OFF DRAIN. THE TOP TERRACE WOULD SLOPE BACKWARDS FORMING THE DRAIN.

PLANTING ON THE SLOPES ALSO SERVES TO STABILISE THE SLOPE.PLANTING OF LOW SURFACE VEGETATION UP-SLOPE OF THE SURFACE CUT OFF DRAIN WILL SLOW ANY RUN-OFF, THUS MAKING IT EASIER FOR THE DRAIN TO COPE WITH SUDDEN DOWNPOURS OR EXCESS WATER.

FOR THE REQUIREMENTS OF PLANTING TREES/SHRUBS ETC, AND THEIR EFFECT UPON THE RESIDENCE, REFER TO THE CSIRO PUBLICATION BTF 18. THE INFORMATION IN THIS SHEET CONSTITUTES PART OF THIS GENERAL FACT *SHEET. WHILE THIS PUBL*ICATION IS FOR AUSTRALIA GENERALLY, IT IS STILL CONSIDERED APPROPRIATE FOR PERTH CONDITIONS. ALTHOUGH WE USE SAND PAD OVER REACTIVE SOILS, THE CLASSIFICATION OF DAMAGE IS STILL APPROPRIATE AS THE FOOTINGS IN PERTH HAVE BEEN REDUCED IN SIZE RELATIVE TO THOSE IN THE EASTERN STATES, WHERE THEY ARE PLACED DIRECTLY INTO CLAY.

THE END RESULTS AND THE PERFORMANCE THAT IS REQUIRED WOULD BE SIMILAR. IN ALL HOUSES CONSTRUCTED ON CLAY SITES, SOME MOVEMENT OF THE FOUNDATIONS AND CRACKING MUST BE EXPECTED WITHIN THE RESIDENCE. IT IS OUTSIDE THE REALMS OF PRACTICALITY AND ECONOMICS TO DESIGN A FOOTING SYSTEM WHICH IS SO STRONG AS TO HAVE NEGLIGIBLE CRACKING OCCUR IN THE HOUSE, AS, TO DO SO , MAY MAKE THE HOUSE UNAFFORDABLE.

THE DEGREE OF CRACKING WHICH IS CONSIDERED NOT UNACCEPTABLE, WHEN THE CRACKING IS CAUSED BY THE SWELLING AND SHRINKING OF THE CLAY FOUNDATIONS (VOLUMETRIC VARIATIONS) AS OPPOSED TO CRACKING CAUSED BY FAULTS, IS DEPENDENT O THE TYPE OF CLAY PRESENT. REFER TO CSIRO PUBLICATION BTF 18 OR AS2870 FOR A TABLE OF DEGREES OF CRACKING WHICH IS CONSIDERED NOT UNACCEPTABLE.

WITH DOLERITIC CLAYS (HIGH REACTIVITY TYPE H) CRACKING UP TO 5mm WOULD BE CONSIDERED NOT UNACCEPTABLE.

WITH STABLE (TYPE S) CLAYS, CRACKING UP TO 1.5mm WOULD BE CONSIDERED NOT UNACCEPTABLE.

WHEN CRACKING IN THESE CATEGORIES OCCUR, DEPENDING ON THE EXTENT, THE REPAIR WOULD FALL WITHIN THE REALMS OF THE HOUSE-OWNERS MAINTENANCE. WHERE CRACKING HAS OCCURRED OUTSIDE THE LIMITS, IN DETERMINING THE RESPONSIBLE PARTIES FOR THE REPAIR, CONSIDERATION NEEDS TO BE GIVEN TO THE COMPLIANCE BY THE OWNER TO THE RECOMMENDATIONS CONTAINED IN THIS FACT SHEET, AS NON-COMPLIANCE WITH THIS INFORMATION MAY BE A CONTRIBUTING FACTOR FOR THE CRACKING.

IT IS TO BE NOTED THAT WHEN A HOUSE IS NEWLY CONSTRUCTED ON CLAY SITES, THE MOST AMOUNT OF MOVEMENT OF THE CLAY WILL OCCUR IN THE FIRST COUPLE OF SEASON CHANGES, AS THE MOISTURE REGIMES ADJUST TO THE NEW SITE CONDITIONS. ONCE THESE CONDITIONS STABILISE OR THE MOISTURE EQUILIBRIUM IS REACHED, THE MOVEMENT OF THE HOUSE IS LESSENED OR STOPPED.

CARRY OUT GOOD GARDEN MAINTENANCE WITH GARDEN MAINTENANCE, ENSURE THAT THE MOISTURE CONTENT OF THE FOUNDATION IS KEPT AS UNIFORM AS POSSIBLE THROUGHOUT THE YEAR. DO NOT PLANT TREES AND SHRUBS IN CLOSE PROXIMITY TO THE HOUSE (IF THIS DOES OCCUR, ENSURE THAT THE ABOVE NOTE IS COMPLIED WITH). DO NOT PLANT TREES CLOSER THAN 1.5 TIMES THE MATURE HEIGHT OF THE TREE. WATER THE GARDEN BY AN AUTOMATIC RETICULATION SYSTEM, WHERE POSSIBLE, TO ENSURE UNIFORM MOISTURE CONTENT THROUGHOUT THE YEAR.

IF EARTHWORKS ARE CARRIED OUT IN SUMMER, WITH CONSTRUCTION COMMENCING IN THE SAME TIME, THERE IS GENERALLY MORE MOVEMENT IN THE CLAY FOUNDATION (CAUSING HOUSE MOVEMENT AND CRACKING) AS THE LONG-TERM MOISTURE LEVELS OF THE CLAY TENDS TO BE CLOSER TO THE WINTER MOISTURE LEVELS THAN THE SUMMER MOISTURE LEVELS.

IF TREE(S) ARE PLANTED IN NON-COMPLIANCE WITH THESE NOTES, INITIALLY NOT A GREAT DEAL OF MOVEMENT IS OBSERVED. HOWEVER, AS THE TREE(S) MATURE, IT STARTS TO DISTURB THE MOISTURE REGIME CAUSING DIFFERENTIAL VOLUMETRIC VARIATIONS IN THE CLAY FOUNDATIONS, WHICH MAY CAUSE CRACKING.

ON SUBSTANTIALLY LEVEL CLAY SITES, NOTES REGARDING SURFACE CUT-OFF DRAINS ARE NOT GENERALLY APPLICABLE, AND THE SURFACE OF THE CLAY IS SHAPED SUCH THAT WATER DRAINS TO THE SUBSOIL DRAIN.

DOC VERSION 1.0 - JANUARY 2010

STRUCterre consulting engineers
Zemla Pty. Ltd. (ABN: 71 349 772 837) ATF the Young Purich and Higham Unit Trust trading as Structerre Consulting Engineers
1 ERINDALE ROAD, BALCATTA W.A. 6021
TEL (08) 9205 4500 FAX (08) 9205 4541 EMAIL: perth@structerre.com.au

PROJECT: LOT 61 SHEARING RISE WUNDOWIE

CLIENT: WA COUNTRY BUILDERS

SCALE 1:20

DATE 9/9/24

APPROVED

© COPYRIGHT STRUCTERRE CONSULTING GROUP - JUL'05